MTR 1000
IEC Single Phase Smart Meters

A Proven Residential Smart Meter and
Powerful Grid Sensor All-in-One

Networked Energy Services

MTR 1000 Key Features

- Forward and reverse active and reactive energy measurements
- 4x16 channels of load profile data; each with independent configuration of interval, size and collection settings.
- Time-of-use supporting multi-tariff energy measurements configurable to time of day, weekends, holidays and seasonal changes
- Advanced tamper and fraud detection
- Secure remote firmware upgrades
- Automatic topology management based on PL communications metrics
- Connect to auxiliary meters (gas, water, heat) and grid devices
- Enable smart home energy management services

Proven, Safe Choice

Reliable, field-tested and accurate, MTR 1000 is based on NES's proven power line (PL) technology used in millions of smart meters, making it Europe's market leading solution. As with the entire line of NES smart meters, the MTR 1000 joins in a highly reliable power line based meshed network. With daily communication reads proven to deliver 99.7-100% reliability, NES's Smart Metering Solution consistently gives you the power consumption and power quality data you need to gain visibility at the edge of the grid.

Protect Revenue and Reduce Operational Costs

NES smart meters create a reliable and robust power line network so you can detect non-technical losses. Tamper-events are detected, logged and communicated even during a power failure and our energy measurement technology is highly resistant to DC magnetic fields. Capable of logging up to 16 channels of load profiling data you can have the right data, at the right time, across all departments to identify potential outages before they occur. By enabling a proactive posture you can reduce your mean-time-to-repair reduce operational costs, and achieve a faster return on capital investment.

A Smart Meter and Powerful Grid Sensor In One

Heightened demand for power availability, distributed generation, and greater efficiency are creating a need for more consumption and power quality measurements at the edge. Meeting this need, NES introduces the first smart meters to offer 4x16 channels of load profile data; each of which can be configured independently for interval, size and collection settings Now you can have a dedicated data set for billing and up to three additional data sets for collecting power quality metrics like voltage, current, total harmonic distortion (THD), and net micro-generation output. You have the flexibility to store this data locally (in the meter) or pull measurements back whenever you need them — daily, weekly or even on a monthly basis.

Networked Energy Services

Open Communications for Expandability and Interoperability

Invest in a meter that can grow with you as your requirements evolve. MTR 1000 provide options that allow you to accommodate auxiliary meters (gas, water, heat) through a standards compliant interface, and is fully capable of securely connecting to ZigBee radio frequency (RF) or LONWORKS® PL, M-bus, Multipurpose Expansion Port (MEP) or Open Smart Grid Protocol (OSGP) devices for Home Area Network (HAN) integration, energy management or other expanded services.

Specifications

Voltage

Nominal Voltage: 220V to 240V phase-to-Neutral Voltage
Range: -20% to +15%

Frequency

Nominal Frequency: 50 Hz
Tolerance: +/- 5%

Power Consumption

Voltage Circuit: < 2W

Apparent Power

<5VA Current Circuit @ Imax: < 6.0VA
@100A, < 5.0VA @ 80A

Temperature

Specified Operating Range: -40° to +70° C (3K7), display fully operational from -25° to +60° C
Limited Operating Range: -40° to +70° C (3K7)
Storage and Transport: -40° to +70° C (3K7)
Humidity: <=95% RH, non-condensing

Current (amperage depends on local regulatory requirements)

Basic: 5A
Maximum: 100A
Starting: 20 mA

Service and Connection Types

Designed for direct connection of line and load conductors on a single-phase, 2-wire electrical service.

Installation

Mounting: DIN 43857
Power Wiring Terminals: Line, load, 2 neutral
Maximum wire size: 35mm sq. (used cables may not fit)
Terminal inside diameter: 9mm.
Enclosure: IP 54 insulating encased meter of protective class 2

Communications

Optical Port: Certified to IEC 62056-21 [2002] (physical and electrical requirements); ANSI C12.18 [2006] (communications protocol); ANSI C12.19 [1997] (data structure)
Channel Type: CENELEC A-band power line communication channel.
Data Security: Password protection for optical communication; authenticated, password-protected transactions and encryption for power line communication.

Certifications

Measurement Accuracy (for 5A basic current and 100A maximum current).
Active Energy: Class 1 certified to IEC 62053-21 [2003]
MID Class B certified to EN 50470-3 [2006]
Reactive Energy Class 2 certified to IEC 62053-23 [2003]

Other Specifications

Safety Ratings: Certified to IEC 61010-1 [2001], CE marked.
Timing/Real Time Clock: Accurate per IEC 62052-21 [2004] and IEC 62054-21 [2004] to +/- 0.5 seconds per day.
Load Disconnect Impulse Voltage: IEC 62052-11 [2003]
S0 Pulse Output: IEC 62053-31, Class A
Physical and Electrical Requirements: IEC 62056-21 [2002]
Frequency: EN 50065-1[2001]
M-Bus Compliance: DIN EN 13757-2 [2002]
DIN EN 13757-3 [2002]
Pulse Output/S0: DIN 43864
Mounting: DIN 43857

Load Disconnect Contactor, With Remote Disconnect and Enable

Mechanical Life at Maximum Power, PF=1:
5,000 cycles
Maximum Switching Current: 100 A
Maximum Overload Current: 120 A, 150 A
(30 minutes)
Maximum Switching Voltage: 277 V AC
Short Circuit < 3mS: 3,000 A
Maximum Switching Power: 27kVA
Insulation Strength: 4 kV at 50Hz, 1
minute

- contact to contact: 2 kV
- coil to contact: 4 kV

Impulse Voltage: 1.2 / 50μS to IEC 62052-11
contact to contact: > 4 kV
coil to contact: > 12 kV

Networked Energy Services

Energy Measurements and Data Collection

Units Measured: kW forward, reverse; kWh forward, reverse, forward + reverse, forward - reverse; kvar import, export; kvarh import, export; RMS voltage; RMS current; power factor; frequency; rolling and block demand for energy sources and per quadrant kvarh (optional).

Verification Output: 2 pulse-output LEDs representing kWh and kvarh; signaling at 1,000 impulses per kWh or kvarh.

Power Quality Analysis: Sag; swell; number of over-current occurrences; number of short power outages; number of long power outages; duration and time of the last 10 long power outages; maximum and minimum frequency; phase loss; total harmonic distortion.

Time of Use: Meters running firmware version 3.5x support 4 tariffs with 10 possible tier switches per day; 12 seasons per perpetual calendar (set by day/month); perpetual holiday calendar for up to 25 holidays per year; perpetual daylight savings changeover; 2 separate holiday day schedules per season; 1 weekday, 1 Saturday, and 1 Sunday day schedule per season. Meters running firmware version 3.7x and higher optionally support up to 8 tariffs.

Data Logging: Up to 4x16 channels available for load profiling. Logging intervals user-selected at 5, 10, 12, 15, 20, 30, 60 minutes, 2, 3, 4, 6, 12 hours, or 1 day.

Data Storage: Non-volatile memory.

Optional Features. All options other than demand metering (which can be activated in the field) must be ordered and included when the meter is manufactured. Certain option combinations may not be available.

Control Relay: Single-pole voltage-free latching relay; maximum load rating is 250V, 5A; fully isolated.

Pulse Output, S0: 1 reference and 1 signal terminal per IEC 62053-31 / DIN 43864.

Pulse Count and Tamper: 2 pulse input channels. Counting and recording pulses from devices with voltage-free pulse transmitters; 25-millisecond minimum pulse width; pulse input circuits are not designed to power intelligent external devices; operates with most passive and opto-coupler/transistor interfaces.

M-Bus: Up to 4 devices; isolated; short-circuit protection; encryption supported; DIN EN 13757-2 and DIN EN 13757-3 compliant.

Multipurpose Expansion Port: Isolated powered or unpowered MEP port for adding secure hardware extensions to meter for communication with other devices like in-home displays or gas/water meters.

CNX 2000: Provides means of communicating with ZigBee Smart Energy Profile 1.0 compliant devices.

CNX 3000: Provides means of communicating with in-home Smart Energy devices based on ISO/IEC 14908-3 C-Band power line communication.

Ordering Information

Product

MTR 1000 Series

Single Phase Meter

Model Number

83332-1IXXX

All specifications subject to change without notice.

P/N 003-0506-01E

Networked Energy Services

MTR 1000 Meter Dimensions
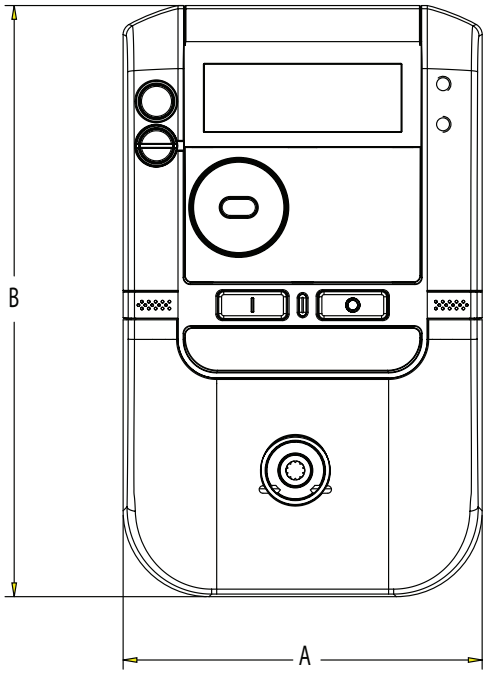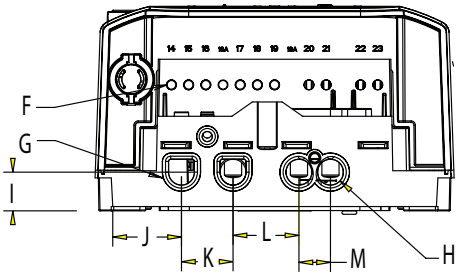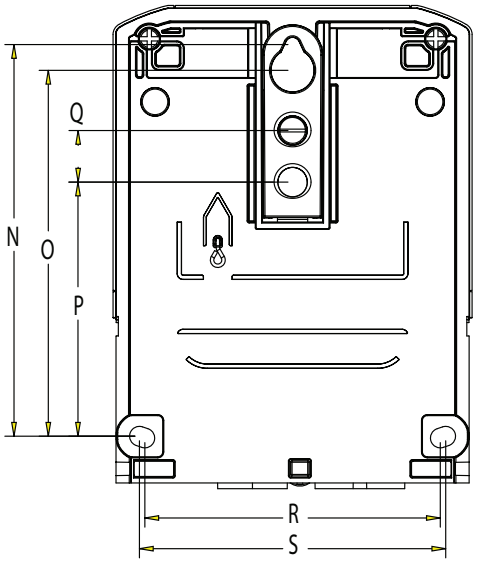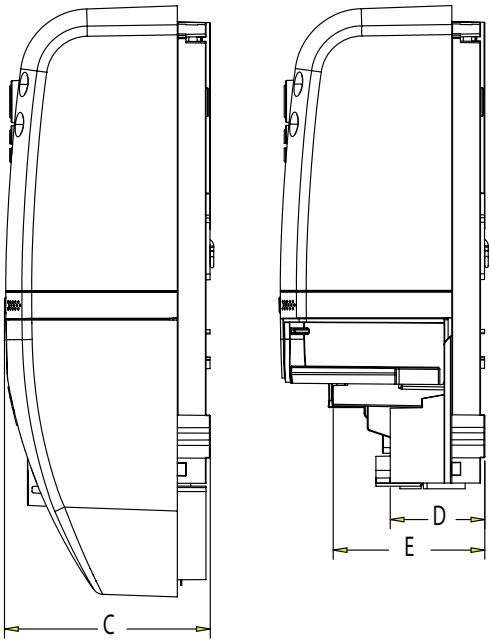
MTR 1000		
	mm	inches
A	125.30	4.93
B	206.30	8.12
C	71.82	2.83
D	33.00	1.30
E	52.90	2.08
F	3.00	0.12
G	9.00	0.35
H	9.00	0.35
I	13.50	0.53
J	24.00	0.94
K	18.00	0.71
L	23.00	0.91
M	11.00	0.43
N	136.68	5.38
O	127.68	5.03
P	88.68	3.49
Q	18.00	0.71
R	103.11	4.06
S	106.89	4.21